Summary in Graph

Exam Summary (GO Classes CS Test Series 2026 | Discrete Mathematics | Subject Wise Test 1)

Qs. Attempted:	0 (0 + 0)	Correct Marks:	0 (0 + 0)
Correct Attempts:	0 (0 + 0)	Penalty Marks:	0 (0 + 0)
Incorrect Attempts:	0 (0 + 0)	Resultant Marks:	0 (0 + 0)

Total Questions:	30 (10 + 20)
Total Marks:	50 (10 + 40)
Exam Duration:	90 Minutes
Time Taken:	0 Minutes

Individual Question Statistics

Select Metric: Marks Obtained

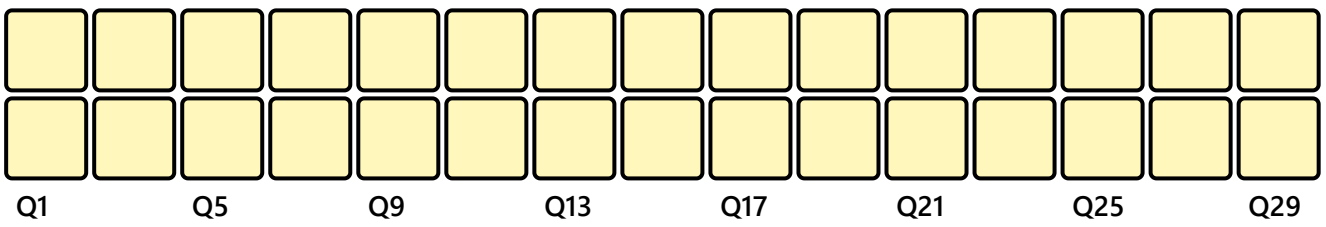

* Average Stats based on first-attempt stats of Top 10% (62) out of 624 users

EXAM RESPONSE | EXAM STATS | FEEDBACK

Technical

Q #1 | Numerical Type | Award: 1 | Penalty: 0 | Discrete Mathematics

Schrodinger owns a beautiful cat called Meow who loves to wear socks on its four feet. Schrodinger has a collection of many cat socks in three colours: white, red and yellow. What is the least number of socks Schrodinger must pull out from the drawer to guarantee getting four socks of matching colour?

Your Answer: | Correct Answer: 10 | Not Attempted | Time taken: 00min 00sec | Discuss

Q #2 Numerical Type | Award: 1 | Penalty: 0 | Discrete Mathematics

Define a set S recursively as follows.
(1) $5 \in S$. (base clause)
(2) If $x \in S$, then $x + 3 \in S$ and $x + 5 \in S$. (recursion clause)

(3) Membership for S can always be demonstrated by (finitely many) successive applications of clauses above. (minimality clause) What is the smallest integer k such that all integers $n \geq k$ are in S ?

Your Answer: | Correct Answer: 13 | Not Attempted | Time taken: 00min 00sec | Discuss

Q #3 Numerical Type | Award: 1 | Penalty: 0 | Mathematical Logic

Let G be a connected graph. A vertex is a cut-vertex such that removing it and all edges incident to it disconnects G, that is, increasing the number of components in G.
How many cut-vertices are there in the graph below?

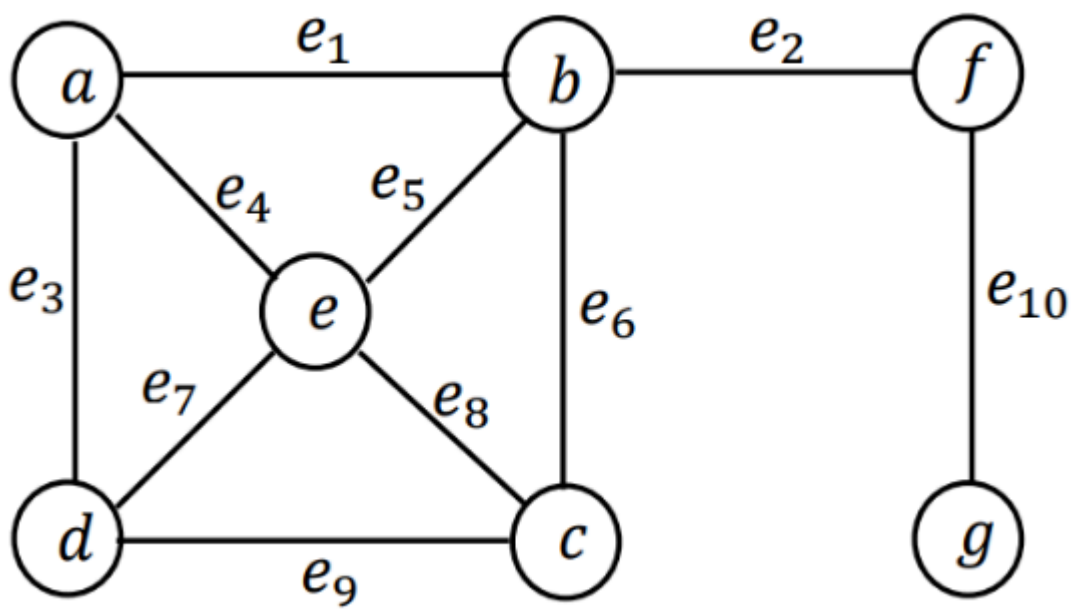

Your Answer: | Correct Answer: 2 | Not Attempted | Time taken: 00min 00sec | Discuss

Q #4 Multiple Choice Type | Award: 1 | Penalty: 0.33 | Mathematical Logic

How many simple undirected graphs (not necessarily connected) can be constructed out of a vertex set of n vertices?

A. $\frac{n(n-1)}{2}$
B. 2^n
C. $\frac{n(n+1)}{2}$
D. $2^{\frac{n(n-1)}{2}}$

Your Answer: | Correct Answer: D | Not Attempted | Time taken: 00min 00sec | Discuss

Q #5 Multiple Choice Type | Award: 1 | Penalty: 0.33 | Mathematical Logic

Let G be a non-planar connected simple graph with the least possible number of edges. Which of the following statements on G is correct?

A. G has 10 edges and 6 vertices.
B. G has 10 edges and 5 vertices.
C. G has 9 edges and 6 vertices.
D. G has 9 edges and 5 vertices.

Your Answer: | Correct Answer: C | Not Attempted | Time taken: 00min 00sec | Discuss

Q #6 | Numerical Type | Award: 1 | Penalty: 0 | Discrete Mathematics

How many non-isomorphic simple, undirected, disconnected graphs with 4 vertices are there?

Your Answer: | Correct Answer: 5 | Not Attempted | Time taken: 00min 00sec | Discuss

Q #7 | Numerical Type | Award: 1 | Penalty: 0 | Discrete Mathematics

Given a relation R on a set $A = \{a, b, c, d\}$ as follows: $R = \{(a, a), (a, b), (a, c), (a, d), (b, b), (b, c), (b, d), (c, d)\}$. How many reflexive relations S are there such that $R \subseteq S$?

Your Answer: | Correct Answer: 64 | Not Attempted | Time taken: 00min 00sec | Discuss

Q #8 | Multiple Select Type | Award: 1 | Penalty: 0 | Discrete Mathematics

Given $A = \{1, 2, 3, 4, 5\}$ and the partial order R on A as follows:
$R = \{(x, x) : x \in A\} \cup \{(2, 1), (2, 5), (3, 1), (3, 2), (3, 4), (3, 5), (4, 1)\}$
Which of the following statements is/are true with respect to this partial order?

A. 1 is a minimal element.
B. 1 is a maximal element.
C. 4 and 5 are non-comparable.
D. 1 is the greatest element.

Your Answer: | Correct Answer: B;C | Not Attempted | Time taken: 00min 00sec | Discuss

Q #9 | Numerical Type | Award: 1 | Penalty: 0 | Discrete Mathematics

Let G is a cyclic group with generator 'a'. Order of 'a' is 29 . The number of subgroups G has ----?

Your Answer: | Correct Answer: 2 | Not Attempted | Time taken: 00min 00sec | Discuss

Q #10 | Multiple Choice Type | Award: 1 | Penalty: 0.33 | Discrete Mathematics

Let $\mathbb{N}$ be the set of all non-negative integers.
Let $f : \mathbb{N} \to \mathbb{N}$ and $f(n) = n\left(n^2 - 1\right)$. Which of the following statements are true?
(i) f is injective.
(ii) f is surjective.

A. Only (i).
B. Only (ii).

C. Both (i) and (ii).
D. Neither (i) nor (ii).

Your Answer: | Correct Answer: D | Not Attempted | Time taken: 00min 00sec | Discuss

Q #11 | Numerical Type | Award: 2 | Penalty: 0 | Mathematical Logic

Piyush is taking the GO-Classes Test Series' Discrete Mathematics test which consists of 5 dreadful MSQs (multiple select questions). Each MSQ has 5 options A, B, C, D and E. In a MSQ question, one or more than one options out of the five options is/are correct. In how many ways can Piyush write his answers for the test, assuming that he writes at least one option in each MSQ question. Note that the order of the options in his answer of a question does not matter, for example, ABC, ACB and BCA are considered the same answer. Also, the order in which he answers the questions, does not matter.

Your Answer: | Correct Answer: 28629151 | Not Attempted | Time taken: 00min 00sec | Discuss

Q #12 | Numerical Type | Award: 2 | Penalty: 0 | Mathematical Logic

An old man climbs 12 stairs. While climbing the stairs, he can take 1-stair or 2-stairs at a time, But he can't take two 2-stairs consecutively. In how many ways can this person climb the 12 stairs?

Your Answer: | Correct Answer: 88 | Not Attempted | Time taken: 00min 00sec | Discuss

Q #13 | Numerical Type | Award: 2 | Penalty: 0 | Mathematical Logic

A genetic sequence is a string over the 4-letter alphabet $\{\mathrm{A}, \mathrm{T}, \mathrm{C}, \mathrm{G}\}$. The number of genetic sequences of length 6 with no two consecutive repeated letters (AA, CC, GG, or T T) is?

Your Answer: | Correct Answer: 972 | Not Attempted | Time taken: 00min 00sec | Discuss

Q #14 | Multiple Select Type | Award: 2 | Penalty: 0 | Discrete Mathematics

Which of the following statements is/are true?

A. The graph $K_{2,4}$ is a planar graph.
B. The graph $K_{3,4}$ is a planar graph.
C. There exists a simple graph that is connected and planar with 5 vertices and 8 faces.
D. The graph $K_5 - \{e\}$ where e is any edge in the graph is 4-colourable.

Your Answer: | Correct Answer: A;D | Not Attempted | Time taken: 00min 00sec | Discuss

Q #15 | Numerical Type | Award: 2 | Penalty: 0 | Graph Theory

You are given a set of n tasks $T = \{T_1, T_2, T_3, \ldots, T_n\}$. Each task T_k is represented by the interval $I_k = [s_k, e_k\ )$ where s_k is the start time and e_k (where s_kInstance: $n = 10$, and $T = \{T_1, T_2, \ldots, T_{10}\}$, and

$$I_1 = [0,3), \quad I_2 = [11,19), \quad I_3 = [14,20), \quad I_4 = [2,5), \quad I_5 = [8,12),$$
$$I_6 = [6,10), \quad I_7 = [1,5), \quad I_8 = [12,16), \quad I_9 = [17,19), \quad I_{10} = [4,9).$$

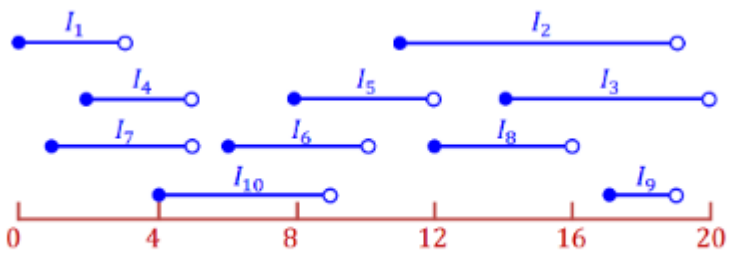

Define a graph $G = (T, E)$ where

$$E = \{\{T_x, T_y\} : (I_x \cap I_y \neq \varnothing)\}$$

Namely, there is an edge $\{T_x, T_y\} \in E$ if and only if the intervals $[s_x, e_x)$ of task T_x overlaps with the interval $[s_y, e_y)$ of task T_y. We call G an interval graph.
What is the chromatic number of the interval graph G for the instance shown above?

Your Answer: | Correct Answer: 3 | Not Attempted | Time taken: 00min 14sec | Discuss

Q #16

Multiple Choice Type | Award: 2 | Penalty: 0.67 | Mathematical Logic

Which of the following statements are true?

(i) Let G be a simple, undirected graph with 6 vertices, 5 edges and no cycles. Then it is not possible to have only one vertex in G with degree 1 .

(ii) Let G be a simple, undirected graph with n vertices and e edges. If G is not connected, then $e < (n-1)$.

(iii) All cycles in the graph $K_{3,4}$ have an even number of edges.

A. Only (iii).
B. Only (i) and (ii).
C. Only (i) and (iii).
D. Only (ii) and (iii).

Your Answer: | Correct Answer: C | Not Attempted | Time taken: 00min 00sec | Discuss

Q #17

Numerical Type | Award: 2 | Penalty: 0 | Discrete Mathematics

Given $A = \{1,2,3,4,5\}$ and the partial order R on A as follows:

$R = \{(x,x) : x \in A\} \cup \{(2,1),(2,5),(3,1),(3,2),(3,4),(3,5),(4,1)\}$
How many distinct linearizations of R are there?

Your Answer: | Correct Answer: 5 | Not Attempted | Time taken: 00min 00sec | Discuss

Q #18

Multiple Select Type | Award: 2 | Penalty: 0 | Discrete Mathematics

Given the equivalence relation $\sim$ on $\mathbb{Z}^2$ defined by

$$(a,b) \sim (c,d) \Leftrightarrow 3|(a-c) \wedge 2|(b-d)$$

Which of the following is/are equivalence classes under this relation?

A. $\left\{(x,y) \in \mathbb{Z}^2 : x, y \in \mathbb{Z}\right\}$
B. $\left\{(x,y) \in \mathbb{Z}^2 : 3x, 2y \in \mathbb{Z}\right\}$
C. $\left\{(x,y) \in \mathbb{Z}^2 : x = 3k-1, y = 2m \text{ where } k, m \in \mathbb{Z}\right\}$
D. $\left\{(x,y) \in \mathbb{Z}^2 : x = 2k, y = 3m \text{ where } k, m \in \mathbb{Z}\right\}$

Your Answer: | Correct Answer: C | Not Attempted | Time taken: 00min 00sec | Discuss

Q #19 | Multiple Choice Type | Award: 2 | Penalty: 0.67 | Mathematical Logic

Let S = {♢, ♣, ♡, ♠}, V = {A, 2,3,4,5,6,7,8,9,10, J, Q, K},
and B = {(♠, A), (♡, 7), (♣, 9), (♠, 6), (♢, J)}.

Which of the following sets contains B as an element? (Note: $\mathcal{P}(\mathbb{X})$ denotes the power set of X).

A. $S \times V$
B. $S \cup V$
C. $\mathcal{P}(\mathbb{S} \times \mathbb{V})$
D. $\mathcal{P}(\mathbb{S} \cup \mathbb{V})$

Your Answer: | Correct Answer: C | Not Attempted | Time taken: 00min 00sec | Discuss

Q #20 | Multiple Select Type | Award: 2 | Penalty: 0 | Mathematical Logic

Let G be a finite group.

Which of the following statements are true?

A. The number of elements x of G such that $x^3 = e$ is odd.
B. The number of elements x of G such that $x^3 = e$ is even.
C. The number of elements x of G such that $x^2 \neq e$ is odd.
D. The number of elements x of G such that $x^2 \neq e$ is even.

Your Answer: | Correct Answer: A;D | Not Attempted | Time taken: 00min 00sec | Discuss

Q #21 | Multiple Select Type | Award: 2 | Penalty: 0 | Mathematical Logic

Let G be a group.

Which of the following is/are true?

A. If for any x, y, z in the group G, $xy = zx$ implies $y = z$. Then G is Abelian.
B. If for any x, y, z in the group G, $xy = xz$ implies $y = z$. Then G is Abelian.
C. If for any x, y, z in the group G, $yx = zx$ implies $y = z$. Then G is Abelian.
D. If for any x, y, z in the group G, $yx = xz$ implies $y = z$. Then G is Abelian.

Your Answer: | Correct Answer: A;D | Not Attempted | Time taken: 00min 00sec | Discuss

Q #22 | Multiple Select Type | Award: 2 | Penalty: 0 | Mathematical Logic

Let G be a group.

Which of the following is/are true?

A. If for every choice of elements in group $\mathrm{G}, axb = cxd$ implies $ab = cd$. Then G is Abelian.
B. In a group, $(ab)^2 = a^2b^2$ if and only if $ab = ba$.
C. In a group, $(ab)^{-2} = b^{-2}a^{-2}$ if and only if $ab = ba$.
D. A group G is Abelian if and only if $(ab)^{-1} = a^{-1}b^{-1}$ for all a and b in G.

Your Answer: | Correct Answer: A;B;C;D | Not Attempted | Time taken: 00min 00sec | Discuss

Q #23 | Multiple Select Type | Award: 2 | Penalty: 0 | Discrete Mathematics

Suppose f and g are functions, which of the following statements is/are true?

A. If f and g are injective, then $g \circ f$ is injective.
B. If f and g are surjective, then $g \circ f$ is surjective.
C. If f and g are bijective, then $g \circ f$ is bijective.
D. If $g \circ f$ is bijective, then f and g are bijective.

Your Answer: | Correct Answer: A;B;C | Not Attempted | Time taken: 00min 00sec | Discuss

Q #24 | Numerical Type | Award: 2 | Penalty: 0 | Discrete Mathematics

The order of a bijection $f : A \to A$ is defined to be the smallest $n \in \mathbb{Z}^+$ such that

$$\underbrace{f \circ f \circ \cdots \circ f}_{n\text{-many } f\text{'s}} = \mathrm{id}_A.$$

Let set $A = \{1, 2, 3, 4\}$ and the bijections $g : A \to A$ and $k : A \to A$ are given as follows:

$$g = \{(1,3), (2,4), (3,2), (4,1)\};$$
$$k = \{(1,3), (2,2), (3,1), (4,4)\}$$

What is the order of $g \circ k$?

Your Answer: | Correct Answer: 3 | Not Attempted | Time taken: 00min 00sec | Discuss

Q #25 | Multiple Select Type | Award: 2 | Penalty: 0 | Discrete Mathematics

Which of the following statements is/are false?

A. $(p \wedge q) \to r \equiv (p \to r) \wedge (q \to r)$
B. $(p \vee q) \to r \equiv (p \to r) \vee (q \to r)$
C. $p \wedge (q \to r) \equiv (p \wedge q) \to (p \wedge r)$
D. $p \vee (q \to r) \equiv (p \vee q) \to (p \vee r)$

Your Answer: | Correct Answer: A;B;C | Not Attempted | Time taken: 00min 00sec | Discuss

Q #26 | Multiple Choice Type | Award: 2 | Penalty: 0.67 | Discrete Mathematics

The island of Wantuutrewan is inhabited by exactly two types of natives: knights who always tell the truth and knaves who always lie.
Every native is a knight or a knave, but not both. You meet four islanders Aiken, Benny, Candy and Dueet. Two of them speak.
Aiken says: Benny never tells the truth.
Aiken says: Candy always lies.
Dueet says: Candy is a knave and I am a knave.
Which of the following is true?

A. Both Benny and Candy are knights.
B. Benny is a knight and Candy is a knave.
C. Benny is a knave and Candy is a knight.
D. Both Benny and Candy are knaves.

Your Answer: | Correct Answer: A | Not Attempted | Time taken: 00min 00sec | Discuss

Q #27 | Multiple Choice Type | Award: 2 | Penalty: 0.67 | Mathematical Logic

Define the logical connective $\sim$ as follows, where p and q are statement variables:

p	q	$p \sim q$
True	True	False
True	False	False
False	True	True
False	False	False

Which of the following are tautologies, where x, y, z are statement variables?
(i) $((x \sim y) \wedge (y \sim z)) \rightarrow (x \sim z)$.
(ii) $((x \sim y) \wedge (y \sim z)) \sim (x \sim z)$.
(iii) $((x \sim y) \wedge (x \sim z)) \rightarrow x$.

A. Only (i).
B. Only (i) and (ii).
C. Only (ii) and (iii).
D. None

Your Answer: | Correct Answer: A | Not Attempted | Time taken: 00min 00sec | Discuss

Q #28 | Multiple Select Type | Award: 2 | Penalty: 0 | Discrete Mathematics

Given that $\forall x \exists y P(x, y)$ is true on a non-empty domain of discourse, which of the following statements is/are true?

A. $\exists y \forall x P(x, y)$
B. $\exists x \exists y P(x, y)$
C. $\forall x \forall y P(x, y)$
D. $\exists x \forall y \sim P(x, y)$

Your Answer: | Correct Answer: B | Not Attempted | Time taken: 00min 00sec | Discuss

Q #29 | Multiple Choice Type | Award: 2 | Penalty: 0.67 | Mathematical Logic

Consider the following statements where $A = \{0,1\},\ B = \{-1,1\},\ C = \{-1,0,1\}$:

(i) $\forall x \in A\ \forall y \in B\ \forall z \in C\ \big((x < y) \rightarrow (y < z)\big)$.

(ii) $\exists x \in A\ \exists y \in B\ \exists z \in C\ \big((x < y) \wedge (y < z)\big)$.

(iii) $\forall x \in A\ \exists y \in B\ \big((x^2 \leq y^2) \rightarrow \forall z \in C\ (y \leq z)\big)$.

Which of the above statements are true?

A. None of options (A), (B) , (C), (D) is correct.
B. Only (iii).
C. Only (i) and (ii).
D. Only (ii) and (iii).

Your Answer: | Correct Answer: B | Not Attempted | Time taken: 00min 00sec | Discuss

Q #30 | Multiple Choice Type | Award: 2 | Penalty: 0.67 | Mathematical Logic

Consider any set A and predicate $P(x, y)$, which of the following statements are true?

(i) $\forall_{x \in A} \forall_{y \in A} P(x, y) \rightarrow \exists_{x \in A} \exists_{y \in A} P(x, y)$.

(ii) $\exists_{x \in A} \exists_{y \in A} P(x, y) \rightarrow \forall_{x \in A} \forall_{y \in A} P(x, y)$.

(iii) $\forall_{x \in A} \exists_{y \in A} P(x, y) \rightarrow \exists_{y \in A} \forall_{x \in A} P(x, y)$.

(iv) $\exists_{x \in A} \forall_{y \in A} P(x, y) \rightarrow \forall_{y \in A} \exists_{x \in A} P(x, y)$.

A. Only (i).
B. Only (iv).
C. Only (i) and (iv).
D. All of (i), (ii), (iii) and (iv).

Your Answer: | Correct Answer: C | Not Attempted | Time taken: 00min 00sec | Discuss

Copyright & Stuff